GRAVOGRAPH

OPERATING AND MAINTENANCE MANUAL

IM3

Pantograph

M_IM3_EN_A - Last updated: 03/2018 - Translation of the French original document

GRAVOTECH

TYPE 3 TECHNIFOR GRAVOGRAPH

Table of contents

A. Foreword

1. Appreciation

Thank you for choosing IM3 - Gravograph.

Gravotech is pleased to count you among the users of its engraving and traceability solutions.

For help, contact Gravotech.

For more information on products, visit www.gravograph.com website.

2. Information

	**To ensure security and productivity, read this manual before starting-up the equipment. It provides details about the installation and use of the equipment.** **Keep this manual in case you need to refer to it.**

	**For the attention of users having an individual cardiac assist device fitted:** **Our equipment is designed and manufactured with the greatest care in order to guarantee their compliance with the EMC Directive currently in force. This means that the levels of electromagnetic emissions produced by this equipment when in operation are limited and do not exceed the thresholds defined by the Directive.** **However, multiple factors make it impossible to guarantee the total absence of risk for users having a cardiac assist device fitted. Consequently, it is recommended that standing for a prolonged period within less than 1 m (3.281 ft) of an operating machine should be avoided.**

B. Legal notices

Last updated: 10/15

The purpose of this document is to provide users (hereinafter the User(s)) with information and to ensure their safety. It has no contractual value and Gravotech group (hereinafter Gravotech) reserves the right, at any time and without notice, to make such changes or improvements as it deems fits, or to substitute any new equipment and/or material and/or part and/or image to its equipment, software and/or associated manuals or documentation (hereinafter the Product(s)).

The intellectual property rights relating to the Products and to this manual, including - but not limited to - patents, trademarks, models, copyright, domain names and also the know-how, trading name or company name, are owned by Gravotech Marking S.A.S or any company of the Gravotech group. Under no circumstances does the transmission of this manual or the supply of Products or services constitute an assignment of or any express or tacit license for any intellectual property right owned by Gravotech.

To the extent permitted by law, Gravotech provides hereby no warranty (in particular no warranties of performance, non-infringement, merchantability or fitness for a particular purpose) relating to the supply of its Products, other than those conferred upon the User by Gravotech's general terms and conditions of sale or any contractual document agreed between Gravotech and the User. Nor does Gravotech guarantee the compatibility of its software with any software package not supplied by it, or any defect in assembly, adaptation, design, compatibility and operation with any or part of a combination created by the User.

Gravotech shall not be liable for any damages, that the User or its property, a third party or the Product itself may suffer, caused by the Product and arising from any inappropriate use or misuse of the Product, negligence, carelessness, inadequate supervision or maintenance, failure to observe the safety or usage instructions described herein or otherwise communicated to the User, the use of poor-quality or non-recommended lubricants, fluids and additives or where there is fault on the part of the User or a third party. As provided in this manual, the User shall furthermore (i) observe the normal conditions of use, (ii) not exceed the recommended maximum number of hours during which the equipment may be operated on and (iii) refrain from proceeding to any Product's repair or make it proceed by any unqualified third party, or without the appropriate personal protective equipment.

The Product's specifications are altered by (i) any Product's modification or alteration, (ii) any adaptation and installation of accessories that are not recommended by Gravotech, (iii) the integration of a control system and (iv) the connection to an external device. Such specifications' alterations may lead to the non-compliance of the Product with applicable rules and standards. Shall the Product be non-compliant, the person in charge of the Product's installation shall be responsible of the final workstation's compliance. In no event, Gravotech shall be liable for any damages arising from such non-recommended or unauthorized Product's alterations. It is precised that the warranty shall not apply in such case.

Under no circumstances shall Gravotech be held liable for any indirect, incidental, special, consequential punitive or other similar damages, including any economic loss, loss of profit, loss of data or opportunity, whether or not foreseeable by or communicated to Gravotech, caused by this manual or the supply of Products or services concerned by the said manual.

To the widest extent permitted by law, Gravotech shall only be held liable for direct damage arising from personal injury caused by a fault proven in its Product (including this manual).

C. Regulation observance

Last updated: 02/2018

EC declaration of conformity or declaration of incorporation supplied with the machinery

Type of machine	Directives - Standards
Dot peen marking: Machine XF500p, XF500m, Impact p, Impact eZ p, Impact m, Impact eZ m P5000PN, P5000EM Scribing marking: Machine B-Engraver, M10, M10 Jewel, M20 Pix, M20 Energy RingCube, TagCube Sharpening by grinding: Machine CG30 Bevelling: Machine B4, B6 Engraving by milling: Machine IM3, IF3 M20, M20 Jewel, M20 ABC, M20 Pen, M20 Beauty Cube, M20 V3 M40, M40G, M40 ABC IS200, IS400, IS400 Volume IS6000, IS7000, IS8000 - XP - XP Milling Hot foil stamping: Machine M20 Artfoil Dot peen marking: Transportable machinery - Partly completed machinery XF530p, XF530m, XE320Cp, XE320Cm Dot peen marking: Partly completed machinery XF510Cp-Sp-Dp, XF510Cm-Sm-Dm, XE310Cp-Sp Scribing marking: Partly completed machinery XF510Cr-Sr-Dr, SV510 CCU, Rack, TouchPad UC500, UC500 SV, UC300, UC Laser Racks IS Laser fume extractor ES10, ES20, ES30, ES40, ES50 LE120HP, LE140HP, LE150HP, LE190HP, LNI900 Accessory: Partly completed machinery APF Rotary, APF Laser PFD500 TAG3500 Cylinder attachment DMC15, DMC25, DMC25PN, DP3500, DP4500, DP4500PN RD1, RD2, RDM	- Low voltage: 2014/35/EU - EMC: 2014/30/EU - RoHS 2: 2011/65/EU
Dot peen marking: Portable machine XM700	- Low voltage: 2014/35/EU - EMC: 2014/30/EU - RoHS 2: 2011/65/EU - Cells and batteries: 2006/66/EC
CO2, Yag and fiber laser marking: Machine (gantry) LS100 Energy, LS100 Ex Energy, LS900 Energy LS100, LS100 Ex, LS900, LS900 XP, LS1000XP LS100 Ex Fibre, LS900 Fibre LS900 Edge CO2, Yag and fiber laser marking: Machine (galvo) LW1, LW2 Laser Solution Hybrid-Series (Energy), Laser Solution Green-Series (Energy), Laser Solution CO2-Series (Energy)	- Machinery: 2006/42/EC - Low voltage: 2014/35/EU - EMC: 2014/30/EU - RoHS 2: 2011/65/EU - Safety of laser products - Part 1: Equipment classification and requirements: EN 60825-1:2008 - Safety of laser products - Part 4: Laser guards: EN 60825-4+A1+A2:2006
CO2, Yag and fiber laser marking: Partly completed machinery (galvo) – Class 4 Laser Solution Fiber-Series (Energy)	- Low voltage: 2014/35/EU - EMC: 2014/30/EU - RoHS 2: 2011/65/EU - Safety of laser products - Part 1: Equipment classification and requirements: EN 60825-1:2008 - Safety of laser products - Part 4: Laser guards: EN 60825-4+A1+A2:2006

D. Introduction

1. Presentation

The IM3 machines are manual engraving machines (pantograph).

An arm fitted with a stylus moves in the groove of the model. The other arm, fitted with a spindle, reproduces the composition.

A depth regulating nose allows even engraving regardless of the material being worked.

A self-centring vice allows rapid positioning of the workpiece for instantaneous engraving.

A centring bracket allows automatic centring of the line to be engraved.

Engraving is performed by the tool holder assembly.

Engraving area: the field of action is the surface travelled by the pantograph in fixed position. The engraving area depends on the reduction ratio used.

Reduction ratio	**Field of action**	
	Rectangle	Square
1: 2	365 mm (14.370 in) x 66 mm (2.598 in)	140 mm (5.512 in)
1: 2.5	223 mm (8.780 in) x 51 mm (2.008 in)	85 mm (3.346 in)
1: 3	152 mm (5.984 in) x 60 mm (2.362 in)	76 mm (2.992 in)
1: 4	89 mm (3.504 in) x 57 mm (2.244 in)	63 mm (2.480 in)
1: 5	76 mm (2.992 in) x 35 mm (1.378 in)	41 mm (1.614 in)
1: 6	70 mm (2.756 in) x 22 mm (0.866 in)	32 mm (1.260 in)
1: 7	35 mm (1.378 in) x 13 mm (0.512 in)	16 mm (0.630 in)

2. Identification of the marking equipment

The marking equipment is identified by:

- 1 identification plate on the rear face

Have the model and serial number of the equipment available when contacting Gravotech.

E. Unpacking

1. Unpacking

Keep the packaging in order to move the machine safely. This packaging is designed to protect the machine during shipping (return for repair...).

The packaging complies with European recycling standards.

Check that nothing is missing from the parcel. If anything is missing, contact Gravotech.

1. Cut and remove the packaging straps.

1. *Strap(s)*

2. Remove the machine from the packaging.

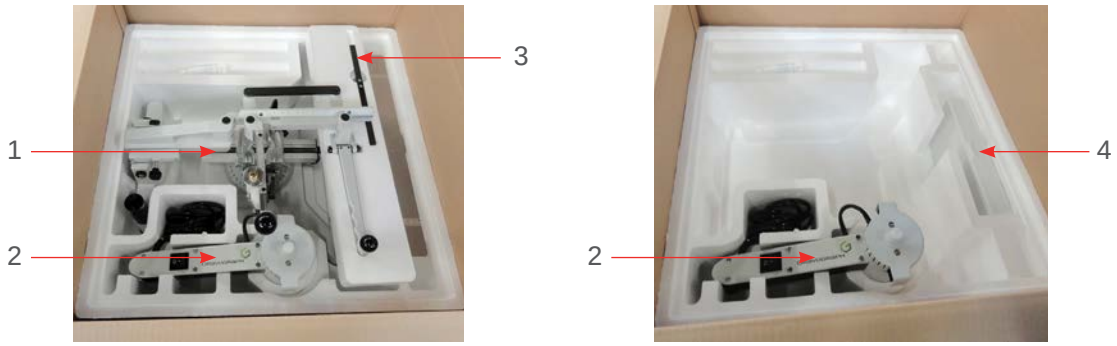

1. *IM3 machine*
2. *Spindle motor*
3. *Height bar*
4. *Toolbox*

Unpacking

2. Package contents

	DVD containing the instruction manual
	IM3 machine
	Spindle motor
	Toolbox
	Height bar
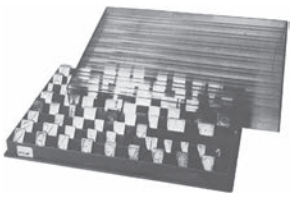	Set(s) of characters (if ordered)

3. Supplied mounted on the machine

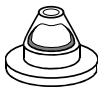	Depth regulating nose
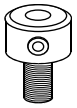	Cutter button(s)
	Nose nut

Unpacking

4. Toolbox: content

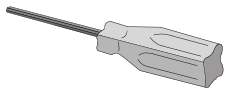	Driver
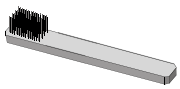	Brush
	Allen key (x2)
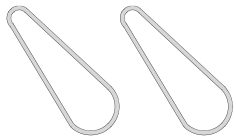	Spindle belt (x2)
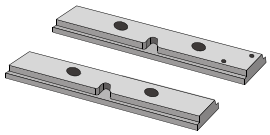	Jig(s)

F. Safety

1. Work station safety

■ Personnel safety

For safety reasons, never operate the machine without constant surveillance.

Turn off the machine before beginning any cleaning, maintenance or repair procedure.

Never hold the materials for engraving by the hands.

Do not start engraving without first ensuring that the object to be engraved is securely clamped. Use only Gravograph clamping systems designed for the machine.

Never take hold of the material for engraving when engraving is in progress.

During engraving, the rotation of the spindle could present risks of burns and cuts.

Keep clear of the tool-holder.

■ Wearing safety glasses

⚠	**The use of safety glasses is recommended for protection against flying swarf.**

■ Handling the machine

Any operations on the machine must be carried out under the responsibility of an adult. Do not allow children to touch the machine, leads or cables.

The machine is designed for light engraving only and under no circumstances should it be used for other applications.

Do not use this machine for wood work.

Do not use this marking equipment in an explosive environment.

In the event of an extended period of non-use, unplug the power cable and protect the machine.

This machine is designed for a single user only. Do not allow its operation by multiple users at the same time.

During engraving operations, use this machine with a (regulating or suction) nose in order to prevent flying swarf.

Use the machine with Gravograph tools only.

2. Required safety labels

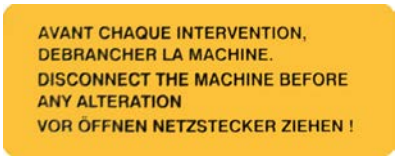	*Unplug the power supply plug before beginning any cleaning or maintenance operation.*

G. Description of the machine

1. Front view of the machine

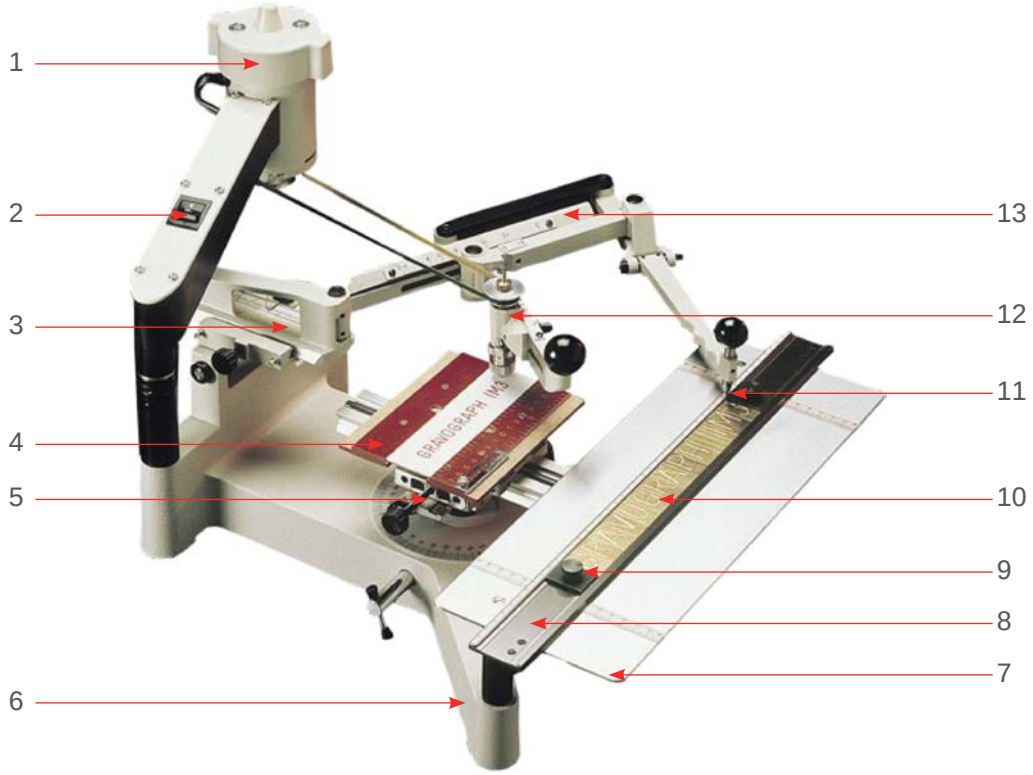

1. *Spindle motor*
2. *General stop button - On / Off switch*
3. *Centring bracket*
4. *Jig(s)*
5. *Self-centring vice*
6. *Frame*
7. *Table*
8. *Slider*
9. *Character blocking*
10. *Character model(s)*
11. *1 stylus*
12. *Tool holder assembly*
13. *Pantograph*

Description of the machine

Tool holder

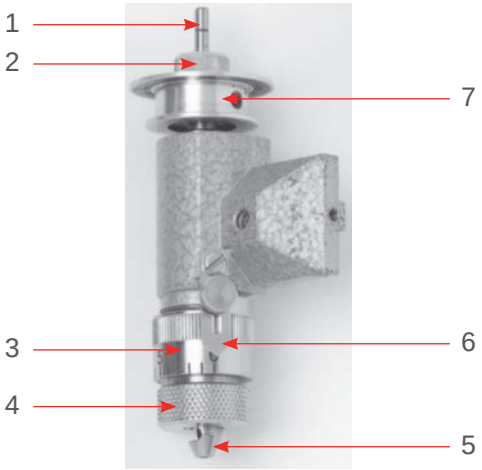

1. *Engraving tool(s) (cutter(s))*
2. *Cutter button(s)*
3. *Scaled knob*
4. *Nose nut*
5. *Depth regulating nose*
6. *Index pin*
7. *Spindle pulley*

H. Recommendations for installation

⚠	**Turn off the machine before any intervention.**

1. Physical installation

- Place the machine on a horizontal, stable and clean surface that can support 100 kg (220.462 lb) or more (Dimensions: 400 mm (15.748 in) x 405 mm (15.945 in) (Minimum)).
- Place the machine in a clean, ventilated environment.
- Ambient light is enough to light the equipment properly.
- Arrange the work surface for rapid and easy access to each external part of the machine and, if necessary, to the main machine stop button.
- Protect the equipment against:
  - damp (rain, snow, condensation etc.)
  - heat (exposure to full sun, heating etc.)
  - sudden changes in temperature
  - dust (extraction duct)

⚠	**The power cable must always be easily accessible (Power shut-off device).**

2. Electrical installation

⚠	**The connection to the single phase power supply is made with a standard, 3 pin plug with grounding. Grounding must be done according to the regulations in effect to ensure the safety of the personnel.**

Check that the electrical installation meets the requirements of the "Input power" label located close to the machine's power supply socket.

To avoid interference problems due to the external environment, observe the following:

- Use the link cables supplied. They comply with EMC radio-frequency interference emission standards and provide protection from external electrical interference (compliant with EMC immunity and susceptibility standards).
- Bring the items of equipment to be linked as close together as possible to reduce the length of cable to be used.
- Separate the power cable from the link cable and make sure the power and link cables do not run through the same cable tray.

Recommendations for installation

- Connect the machine direct to a mains power line and avoid connecting more than one device to that line (by plugging several devices into the same mains socket or into a multi-way adapter). Exception: Where equipment is connected, such as a computer and the machine, supply power to the devices through the same mains power line.
- Do not allow inductive or capacitive devices to be connected to the same mains power line as the machine (motors, solenoid valves, chargers, etc.).
- Avoid the installation of manual or automatic switching systems on the same mains power line as the machine (relays, timers, programmers, automatic circuit-breakers, automatic switches, etc.).
- Check that devices in the vicinity of the machine meet the standards for electromagnetic interference (Read the technical data sheet for each device.). If they are non-compliant, move them as far away from the machine as possible.
- Use the Gravograph accessories.

I. Connections - Installation

1. Connections

■ Power supply connection

To cut off the power to the machine if there is a serious problem, unplug the power cable or operate the On/Off switch (general stop button).

Connect the machine to the power supply (dangerous voltage).

2. Assembly: Spindle motor

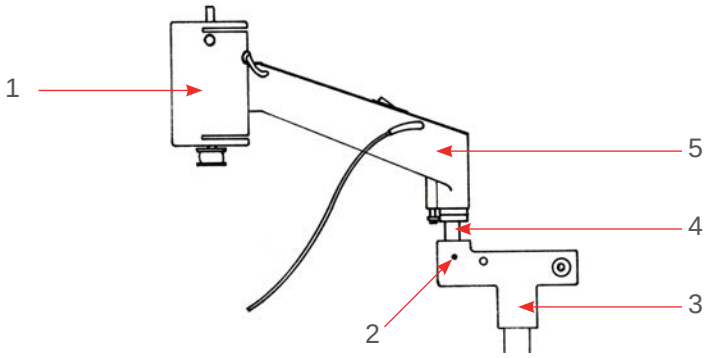

1. *Spindle motor*
2. *Screw*
3. *Frame*
4. *Rotary device*
5. *Motor arm*

1. **Insert the rotating axis of the motor arm into the hole in the frame (motor: forward).**
2. **Tighten the screw(s).**
3. **Place the belt in position at the beginning of the motor pulley groove.**
4. **Turn the motor arm clockwise (backward).**
5. **Place the belt in position in the spindle pulley groove.**

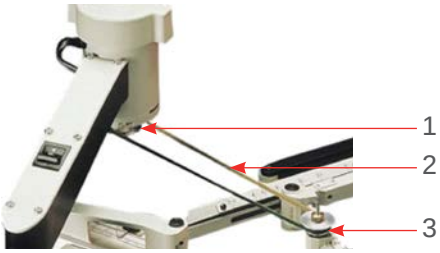

1. *Motor pulley*
2. *Belt*
3. *Spindle pulley*

3. Installation

Switching on the machine

Place the switch in the "I" position (On).

Resolution of the problems

If the machine does not switch on:

- Check that the power cord is correctly plugged in to both the machine and the power supply.
- Check that there is power to the mains plug.

Power down

Set the general stop button to the "O"(Stop) position.

Switch off the machine in the following situations:

- when the operator is permanently leaving the machine
- in the event of physical damage (something is dropped on the machine, fire, a liquid is spilled on the machine, etc.)
- mechanical/electrical/electronic faults suggesting a breakdown
- external/internal cleaning

J. Using the machine

1. Positioning the object to be engraved

■ Vice

1. Position setting

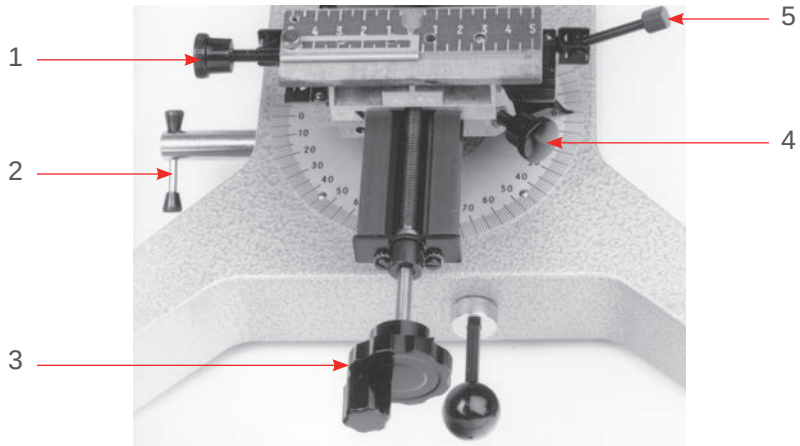

1. *Locking knob(s): Forward / Back*
2. *Locking lever: Rotation*
3. *Handle for opening/closing the vice jaws*
4. *Locking knob(s): Left / Right*
5. *Adjustment button: Raising / Lowering*

- Forward / Back: Unscrew the locking buttons. Position the vice.
- Rotation: Unscrew the handle(s). Turn the vice.
- Opening and closing the jaws: Separate the jaws by turning the handle.
- Left / Right: Unscrew the locking buttons. Position the vice.
- Raising / Lowering: Turn the adjustment button.

2. Choose the jigs according to the length of the object to be engraved. Consult a Gravotech retailer to find out about the various jigs available.

The length of the object to be engraved must never exceed that of the jigs.

Jig(s)

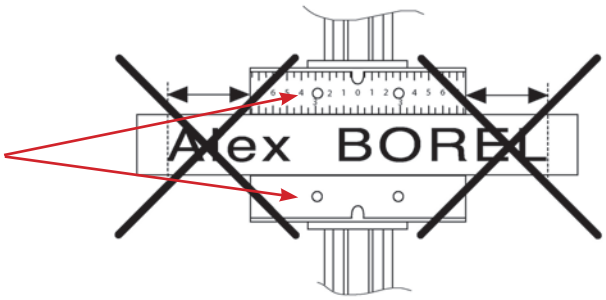

Using the machine

3. **Choose the appropriate side of the jig according to the object to be engraved or the thickness of the plate.**

The plate must be slightly higher than the jigs in order to prevent the regulating nose from striking the jig:

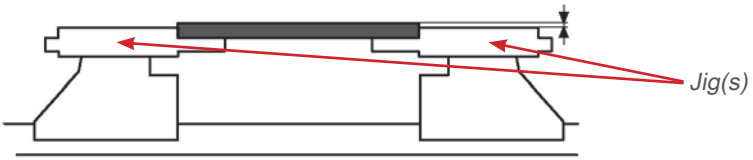

4. **Mark the mid-point lengthwise of the object to be engraved.**

5. **Center the object to be engraved such that the mark on the object is aligned with the 0 notch on the jig (center origin).**

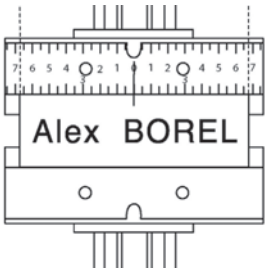

6. **Using the tightening knob, clamp the object so as to immobilize it during engraving.**

Correct clamping helps to reduce the noise of the machine and to minimize vibration during engraving.

⚠	**Check that the object is clamped such that it cannot be ejected during engraving.**

2. Adjustment on the tool holder

■ Engraving with a regulating nose

1. Place the regulating nose in its recess on the spindle. Tighten the nose nut.

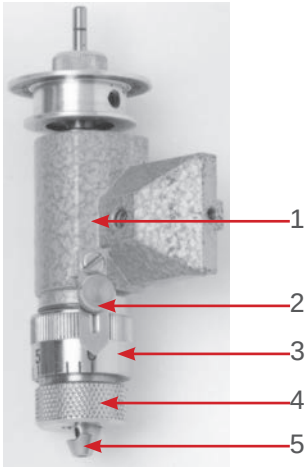

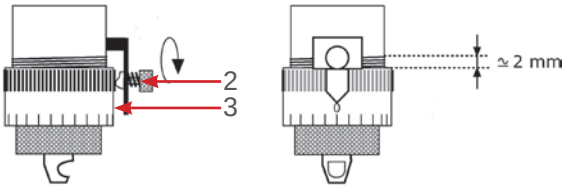

1. *Rotary spindle*
2. *Index pin*
3. *Scaled knob*
4. *Nose nut*
5. *Depth regulating nose*

2. Loosen the index pin. Loosen the scaled knob.
Align the 0 of the scaled knob with the index pin.

The scaled knob must be loosened such that the index pin can lock it:

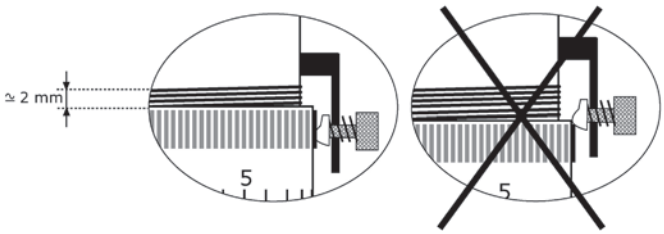

Using the machine

Mounting the cutter on the tool holder

	Because the tool is sharp, use personal protective equipment when handling it. **Carbide cutters are fragile.**

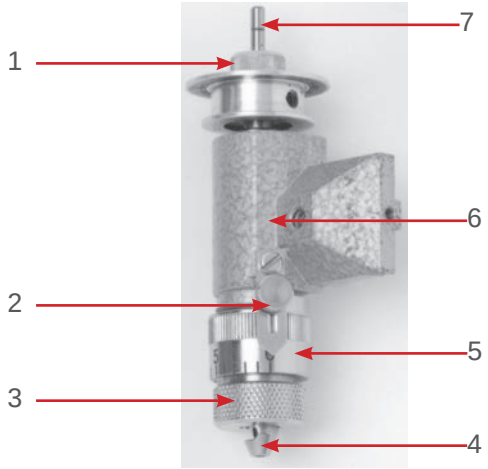

1. *Cutter button(s)*
2. *Index pin*
3. *Nose nut*
4. *Depth regulating nose*
5. *Scaled knob*
6. *Rotary spindle*
7. *Cutter(s)*

1. **Screw cutter button onto the spindle (counter-clockwise).**
2. **Lower the tool carrier until the depth regulating nose touches one of the jigs.**
3. **Insert the cutter into the spindle until it comes into contact with the material to be engraved. In order to facilitate the passage of the cutter, slightly loosen the screw on the upper part of the cutter button.**
4. **Tighten the screw of the cutter button to lock it into place.**

<u>If the engraving/marking job requires several cutters:</u>

5. **Unscrew the cutter button (clockwise). Do not change the tightening tension of the screw.**
6. **Remove the cutter, leaving the cutter button fixed above it in order to maintain the setting.**
7. **Repeat the 2 steps above in order to preset the following cutters.**

Recommendation:

- Finish the presetting operation with the cutter that is to be used first.
- It is advisable to have as many cutter buttons as you have cutters, so that they can be left assembled and the settings saved if necessary (materials of the same thickness).

Using the machine

Adjusting the engraving depth

1. **Turn the scaled knob a few notches to the right to obtain the desired engraving depth.**
   1 division(s) = 0.025 mm (0.001 in)

The number of notches depends on the engraving depth and the material:

Material to be engraved	Type of cutter	Depth	Number of notches
Anodized aluminum	carbide point	0.1 mm (0.004 in)	4
Silver	carbide point	0.3 mm (0.012 in)	12
Chrome	diamond point	0.025 mm (0.001 in)	1
Gravometal	carbide point	0.1 mm (0.004 in)	4
Gravoply II	carbide point	0.1 mm (0.004 in)	4
Stainless steel	diamond point	0.2 mm (0.008 in)	8
Brass	carbide point	0.2 mm (0.008 in)	8
Metallex	carbide point	0.1 mm (0.004 in)	4
Gold	carbide point	0.3 mm (0.012 in)	12
Plastic	carbide point	0.2 mm (0.008 in)	8

2. **Tighten the index pin in order to secure the scaled knob in this position.**

Reduction ratio: Adjustment

- **Calculation**

This value must be between 1 and 7.

Reduction ratio = Height of the model / Text height

Example: Height of the model (18 mm (0.709 in)) / Text height (6 mm (0.236 in)) = Reduction ratio (3): (18 / 6 = 3).

Check text length:
Reduction ratio = Text length / Fixed length

Using the machine

- **Adjusting the machine:**

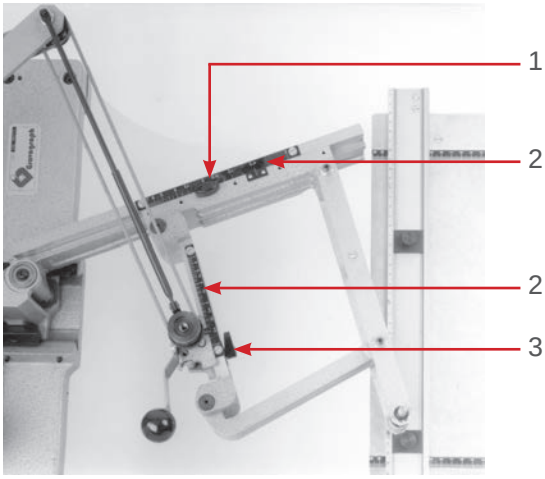

1. *Tightening handle (pantograph)*
2. *Rule*
3. *Tightening handle (tool holder)*

1. **Loosen the tightening handle (1-2).**
2. **Bring the locator to the chosen ratio (rule).**
3. **Tighten using the tightening knob (1-2).**

	Offset locators will deform the engraving.

Centring bracket: adjustment

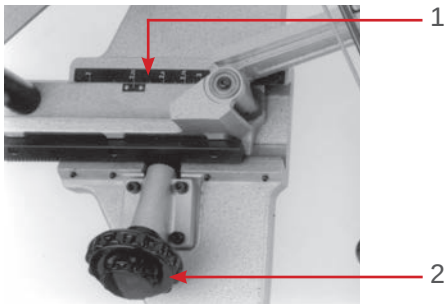

1. *Rule*
2. *Tightening handle (centring bracket)*

1. **Loosen the tightening handle.**
2. **Bring the locator to the chosen ratio (rule).**
3. **Tighten using the tightening knob.**

Using the machine

■ Engraving plane: adjustment

The cutter must always be perpendicular to the engraving plane.

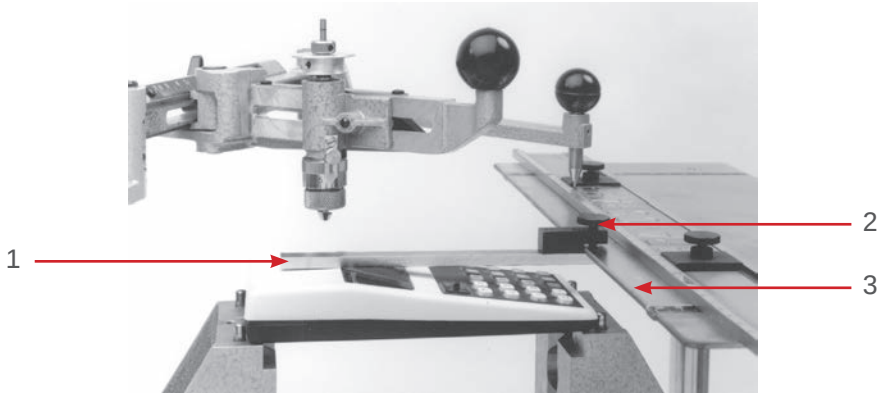

1. *Height bar (supplied with the machine)*
2. *Knurled screw*
3. *Table*

1. Fix the height bar to the table (knurled screw: above).

2. Adjust the vice such that the workpiece comes into contact with the bar (see: "Vice").

■ Pantograph: balancing (if necessary)

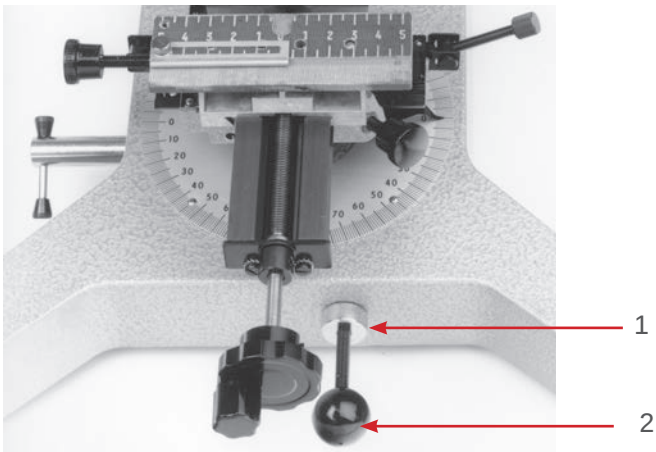

1. *Support ring*
2. *Button(s)*

1. Pull the button.

2. Adjust the ring.

Using the machine

3. Engraving

1. Select the cutter.

The quality of the result depends on the quality of the tool.

Material to be engraved	Type of cutter		Lubrication	
	carbide point	Fast steel		
Gravoply (1-2) - (ABS)	X	X	No	
Gravoglas (1-2) - (Acrylic)	X	X	No	
Gravostrat - (Phenolic)	X		No	
Gravoxal - anodized aluminum	X	X	Yes	Surfex
Gravometal - (Brass)		X	Yes	Engravoluble
Soft steel		X	Yes	Engravoluble
Stainless steel	X		Yes	Engravoluble
Gold		X	Yes	
Tempered steel	diamond point		No	
Glass	diamond point		Yes	Water - Soluble oil

2. Select the cutting width.

Text height (mm)	1.5	2-3	3-4	5-6	7-8	8-10	10-12	12-16	16-20-24	24-30
Cutting width (mm)	0.2	0.3	0.5	0.75	1	1.25	1.5	2	3	4
Cutter(s) - standard - Gravograph (mm)	0.25 (V)	0.32 (A)	0.50 (B)	0.75 (C)	0.75 (C)	1.25 (D)	1.25 (D)	2.00 (E)	3.17 (F)	3.17 (F)
Depth regulating nose	Hole diameter = 0.9 mm (0.035 in)		Hole diameter = 1.5 mm (0.059 in)		Hole diameter = 2.3 mm (0.091 in) (Supplied with the machine)			Hole diameter = 3.3 mm (0.130 in)		

3. Adjust the engraving plane (see: "Engraving plane: adjustment").

4. Centre the engraving.

Automatic centering: position setting

- Adjust the centring bracket to the same scale as the pantograph.
- Adjust the vice to 0 (Forward / Back - Left / Right).
- Position the lower edge of the copy-slide on the table scale:

Slider	Bottom edge
Single - Character model(s): 18.45 mm (0.726 in)	101 mm (3.976 in)
Single - Character model(s): 31.75 mm (1.250 in)	92 mm (3.622 in)
Combined - Character model(s): 31.75 mm (1.250 in) - 69.85 mm (2.750 in)	75 mm (2.953 in)
Triple - Character model(s): 31.75 mm (1.250 in)	57 mm (2.244 in)

To engrave multiple lines, move the vice, the centring bracket and/or the copy-slide (As desired).

	On some character sets, the letters are not centred. Engraving is offset with respect to the centre of the jig. Re-centre by moving the copy-slide.

5. **Centre the composition in the copy-slide.**
6. **Check that the object is clamped such that it cannot be ejected when the machine is operating.**
7. **Once positioning is complete, check that the buttons and levers have been tightened.**
8. **Place the switch in the "I" position (On) (except: diamond engraving).**
9. **With one hand, place the stylus in the groove of the model.**
10. **With the other hand, lower the cutter.**
11. **Follow the model while maintaining the cutter in contact with the workpiece.**

	Never lower the cutter without first having placed the stylus in the groove of the model. **Always raise the cutter before the stylus.**

Diamond engraving (no nose - without the motor): apply light pressure on the tool. Perform several passes (if necessary).

	Diamond engraving: the diamond tip is vulnerable to impacts. Handle with care.

12. **Check that the engraving is complete before loosening the workpiece or removing the model.**

K. Preventive maintenance

1. General maintenance

⚠	**Unplug the power supply plug before beginning any cleaning or maintenance operation.** **The mains power cable must be replaced immediately if it is cut or crushed, cracked or a conductor is stripped bare.**

Regularly cleaning the machine improves its operation, extends the life of parts and reduces the risk of failure.

Recommendations:

- Keep the machine clean. Remove chips periodically.
- Clean the regulating nose with the brush.
- The motor does not require any lubrication.
- Never move the graduated rules.
- Never lubricate the ball bearings of the spindle.

Only the following operation(s) can be carried out by the user:

- Changing the spindle belt
- Replacing the motor carbon brushes

For help, contact Gravotech.

2. Replacing the motor carbon brushes

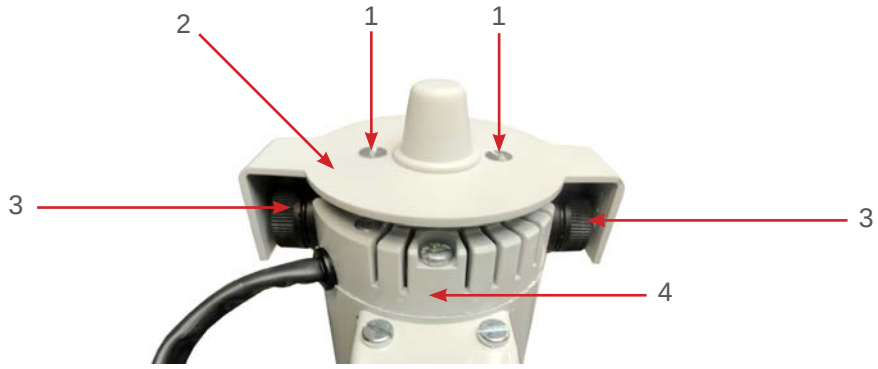

1. *Screw*
2. *Casing*
3. *Motor carbon brush(es)*
4. *Spindle motor*

1. **Remove the screw(s). Remove the casing.**

2. **Replacing the motor carbon brushes.**

Preventive maintenance

3. Slanted engraving

When engraving is slanted: 4 points need to be checked in the following order:

- Are the reduction ratios identical on the 2 arms of the pantograph?
- Is the height of the engraving plane correct?
- Is the copy-slide holding the characters parallel? Identical locators on the right-hand and left-hand rules of the table
- Is the rotation index set to the 0° position?

L. Technical specifications

1. Physical characteristics

Dimensions (L x w x h): machine	580 mm (22.835 in) x 510 mm (20.079 in) x 280 mm (11.024 in)
Net weight: machine	11 kg (24.251 lb)
Dimensions (L x w x h): machine + packing	580 mm (22.835 in) x 580 mm (22.835 in) x 340 mm (13.386 in)
Weight: machine + packing	14 kg (30.865 lb)

2. Engraving characteristics

	IM3	**IM3 - diamond point**
Pantograph	25 x Reduction ratio (range of values: 1/2 - 1/7)	
Table surface	150 mm (5.906 in) x 405 mm (15.945 in)	
Engraving area	250 mm (9.843 in) x 140 mm (5.512 in)	
Opening the vice	Maximum: 140 mm (5.512 in)	
Width	Maximum: 250 mm (9.843 in) - (aluminum jigs (optional))	
Length	Unlimited	
Field of action	Reduction ratio = 1/2: 365 mm (14.370 in) x 66 mm (2.598 in) Or 250 mm (9.843 in) x 115 mm (4.528 in)	
Movement: Forward - Back	135 mm (5.315 in)	
Max height of the part to be marked	50 mm (1.969 in)	
Type of spindle(s)	Rotating / through spindle with cutter button	diamond point
Tool: diameter	3.17 mm (0.125 in)	
Speed of rotation	Maximum: 18000 rpm	
Scaled knob	with an accuracy of 0.025 mm (0.001 in)	

3. Noise emission of the machine (ISO 11201 standard)

L_{Aeq} - when awaiting engraving	71 dB (A)
L_{Aeq} - during nominal engraving	80 dB (A)
L_{pc} peak - Peak at rated engraving	< 100 dB (C)

Technical specifications

4. Electrical characteristics

■ Spindle motor

	IM3 - 220-240 V	IM3 - 110-120 V
Type:	Universal motor - 220-240 V	Universal motor - 110-120 V
Nominal voltage	220 - 240 V	110 - 120 V
Absorbed current	Maximum: 0.7 A	Maximum: 1.2 A
Absorbed power	55 W	55 W
Frequency	50 Hz	50 - 60 Hz

5. Environment

Operating temperature	5 °C (41 °F) - 40 °C (104 °F)
Storage temperature	-5 °C (23°F) - 45 °C (113 °F)
Humidity level:	20 - 80 %